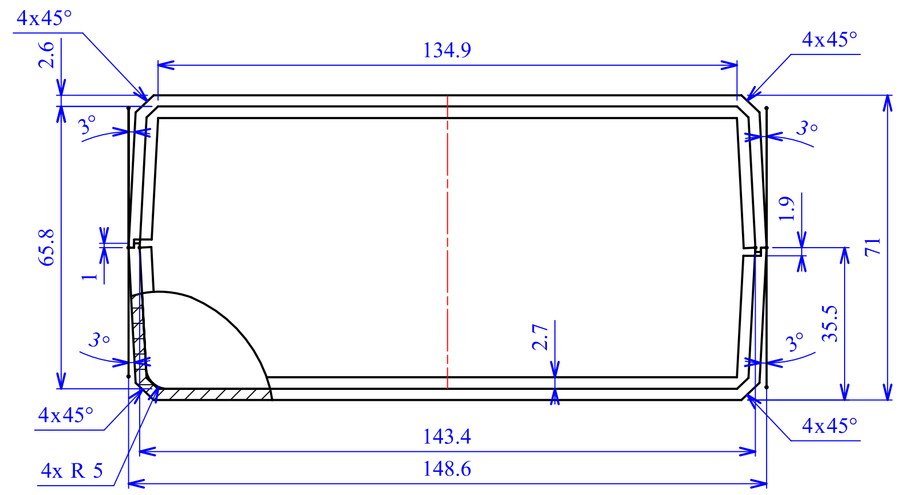

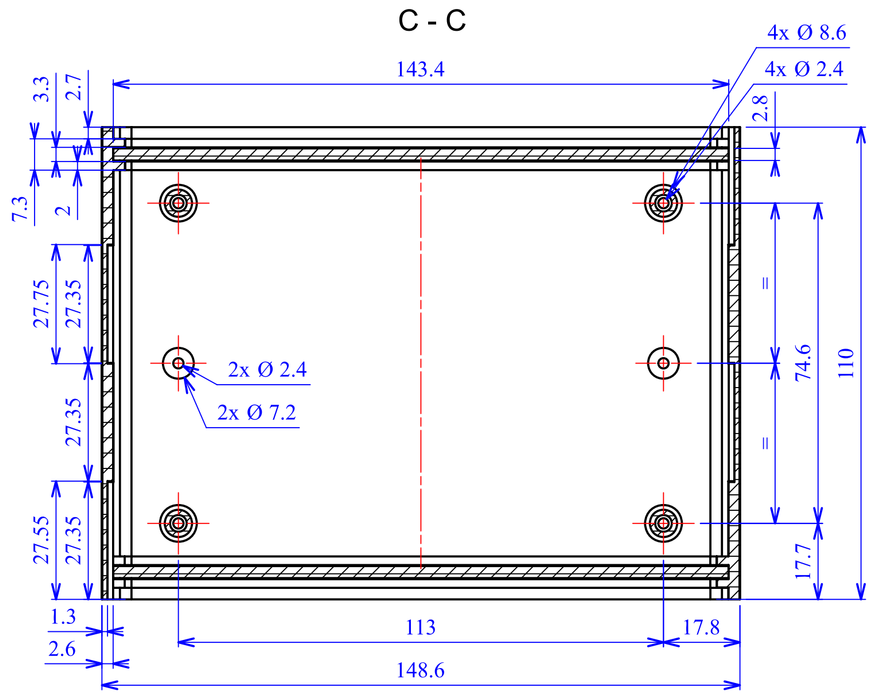

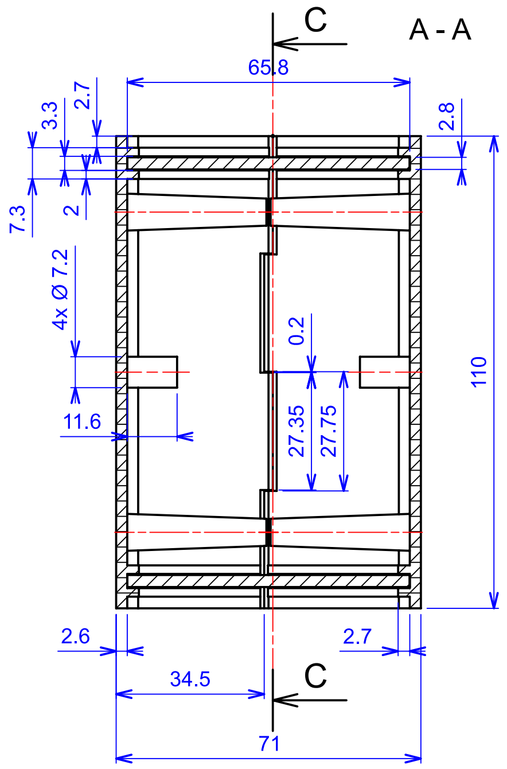

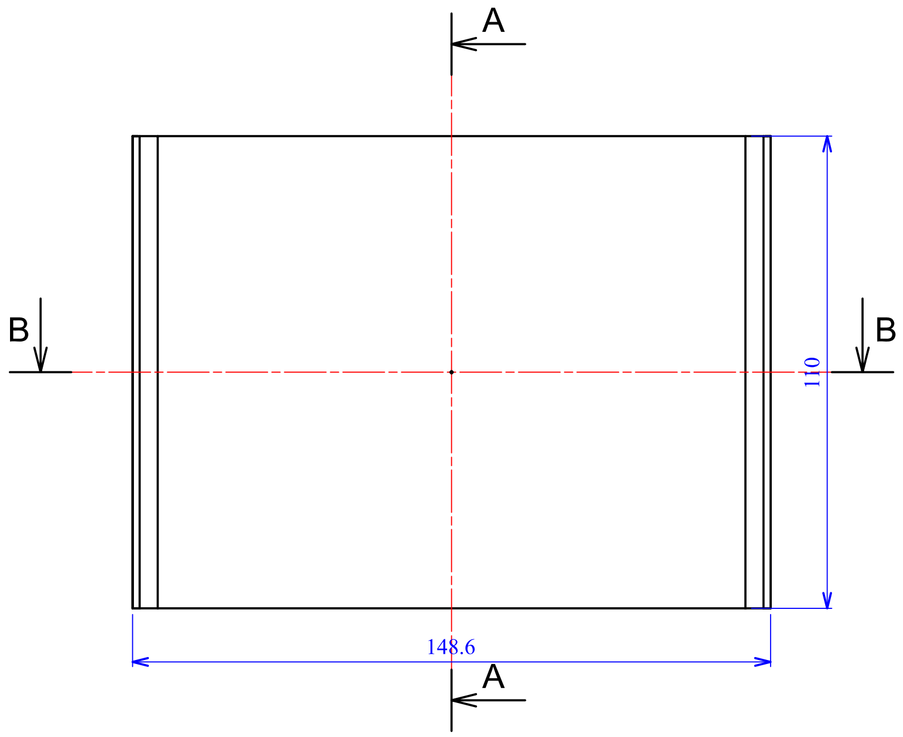

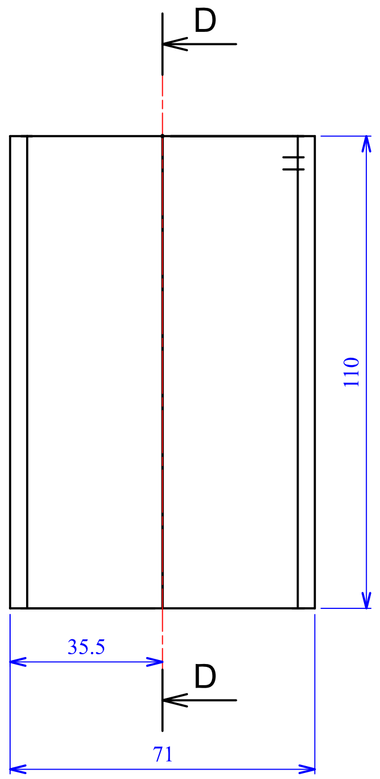

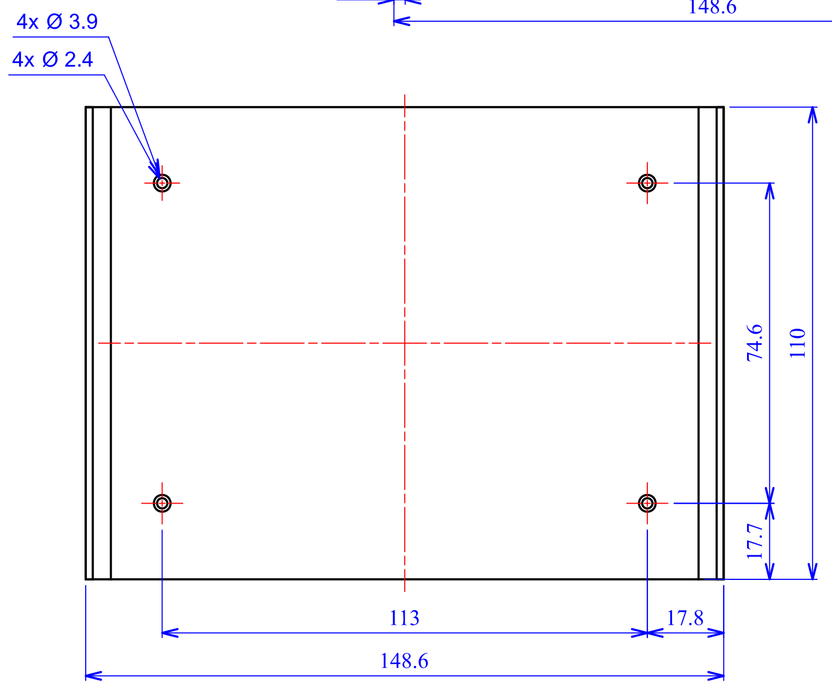

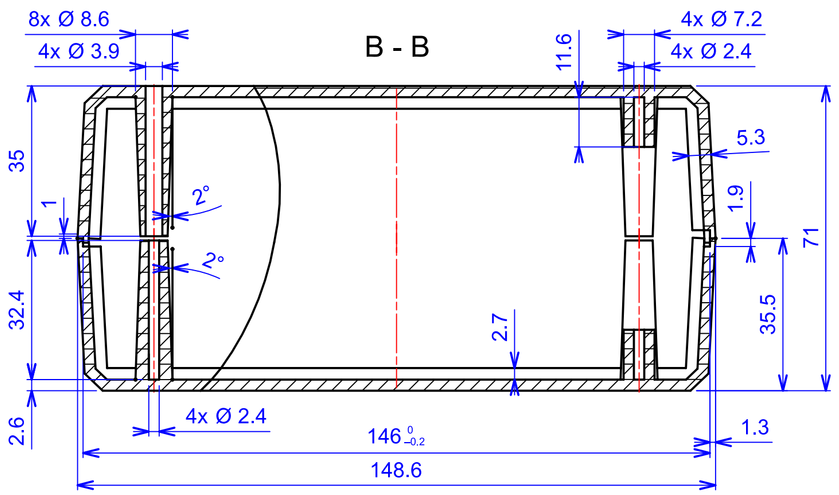

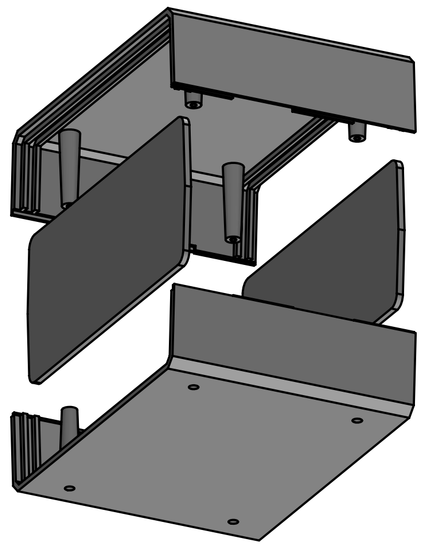

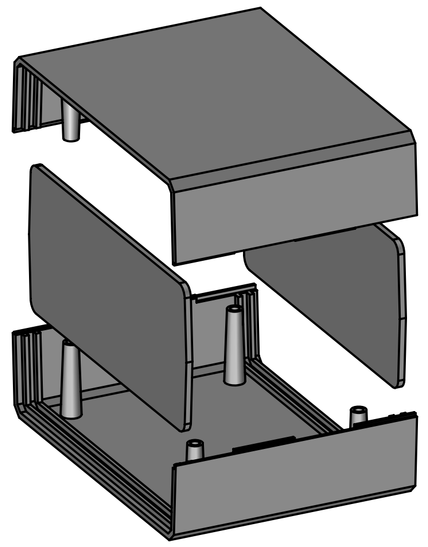

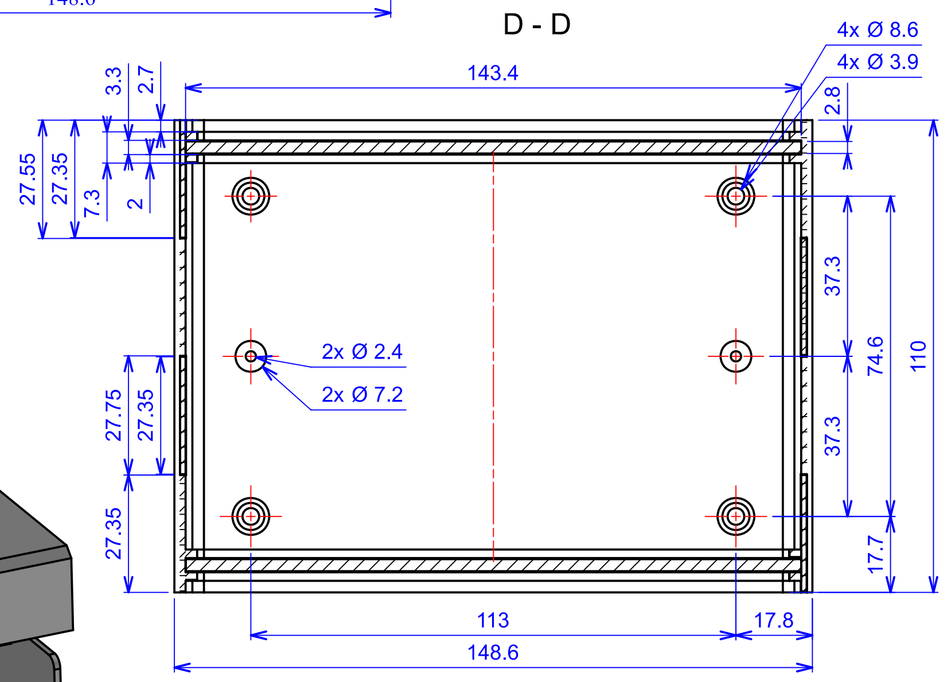

Model produktu	Z-3 P	KradeX
Format: A4	Materiał: Polystyrene (PS)	KRADEX ul.Naddnieprzańska 32 04-205 Warszawa Tel:+48 022 613-08-88, Fax: 812-10-68 www.kradex.com.pl
Skala: 1:1	Tolerancja: +/- 0.1	

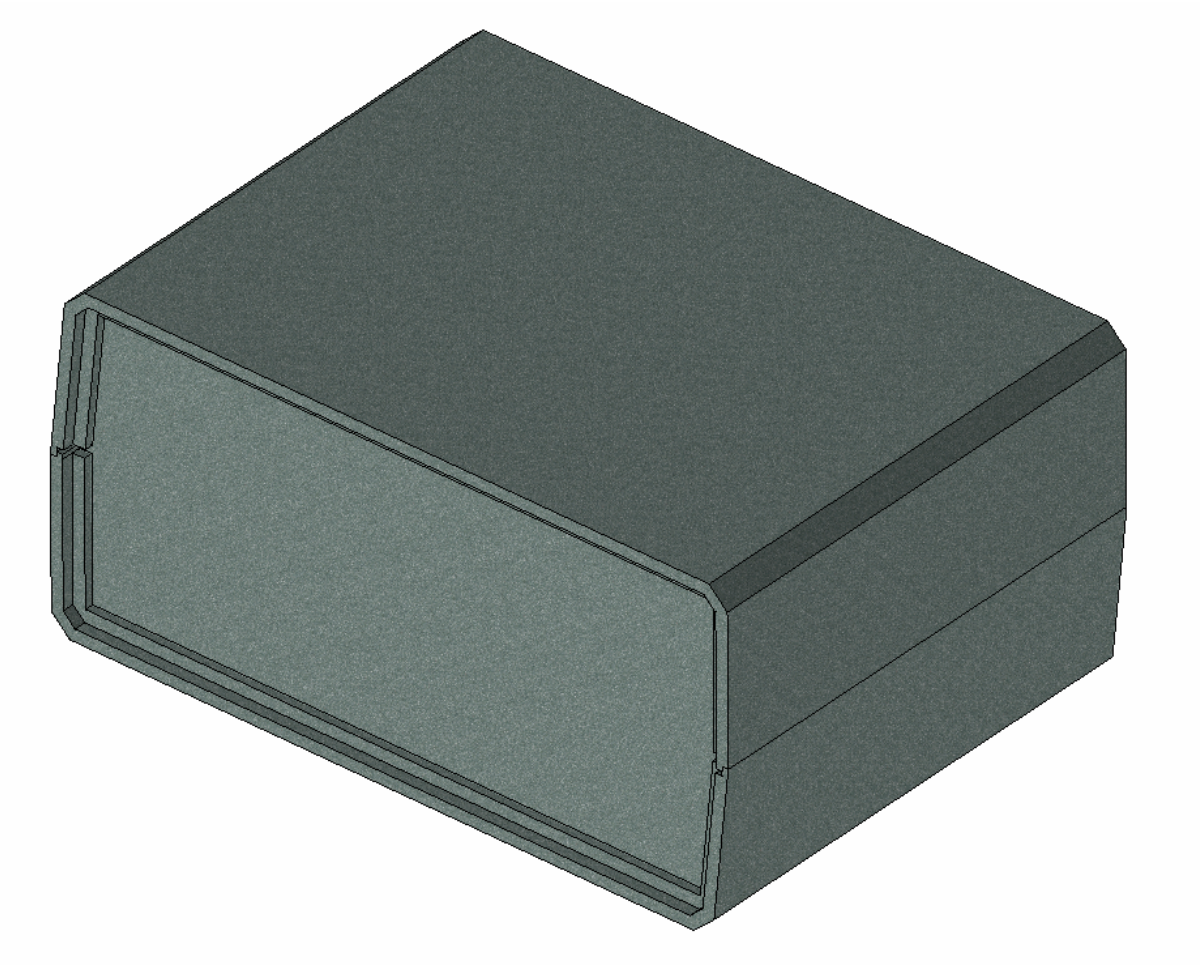

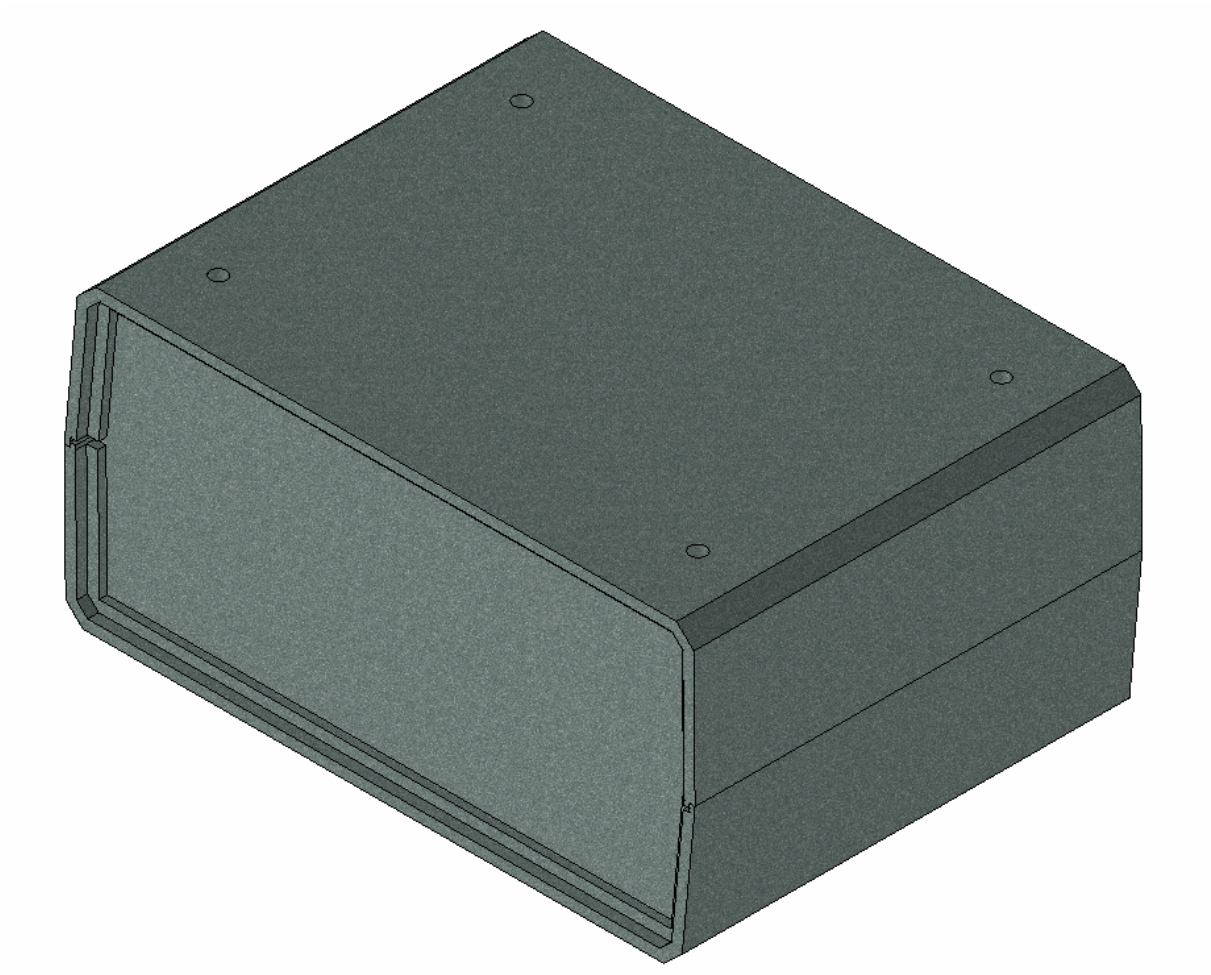

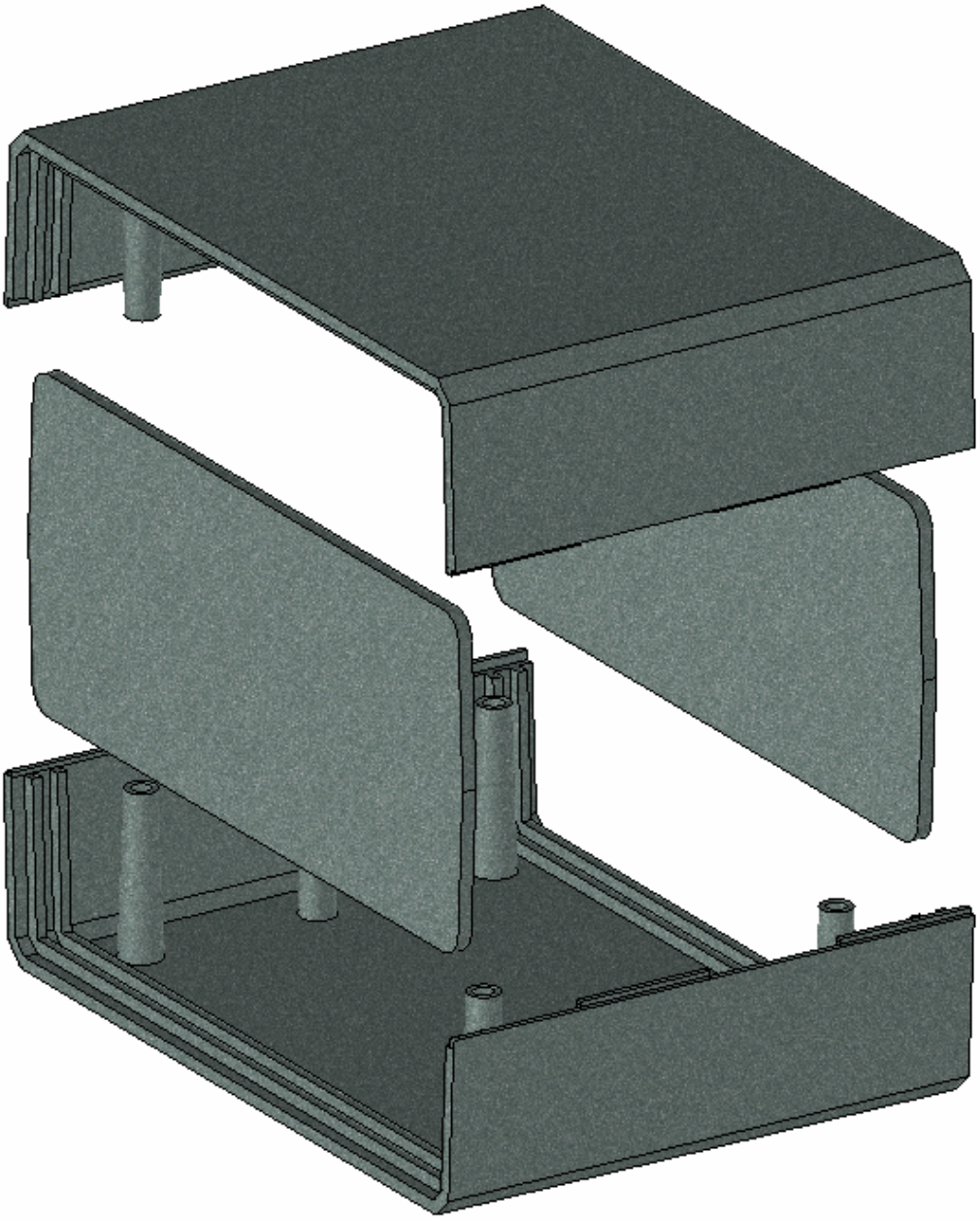

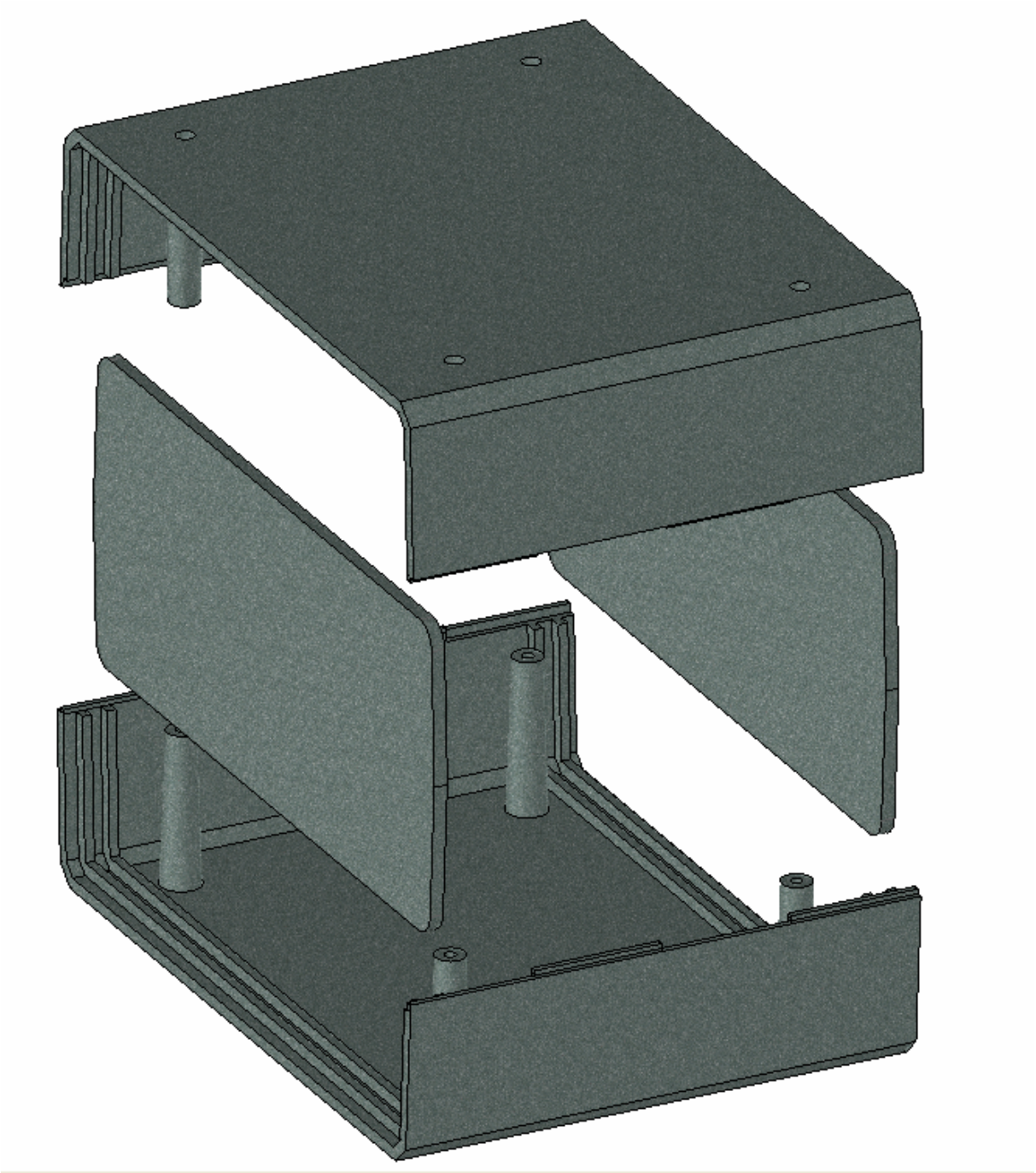

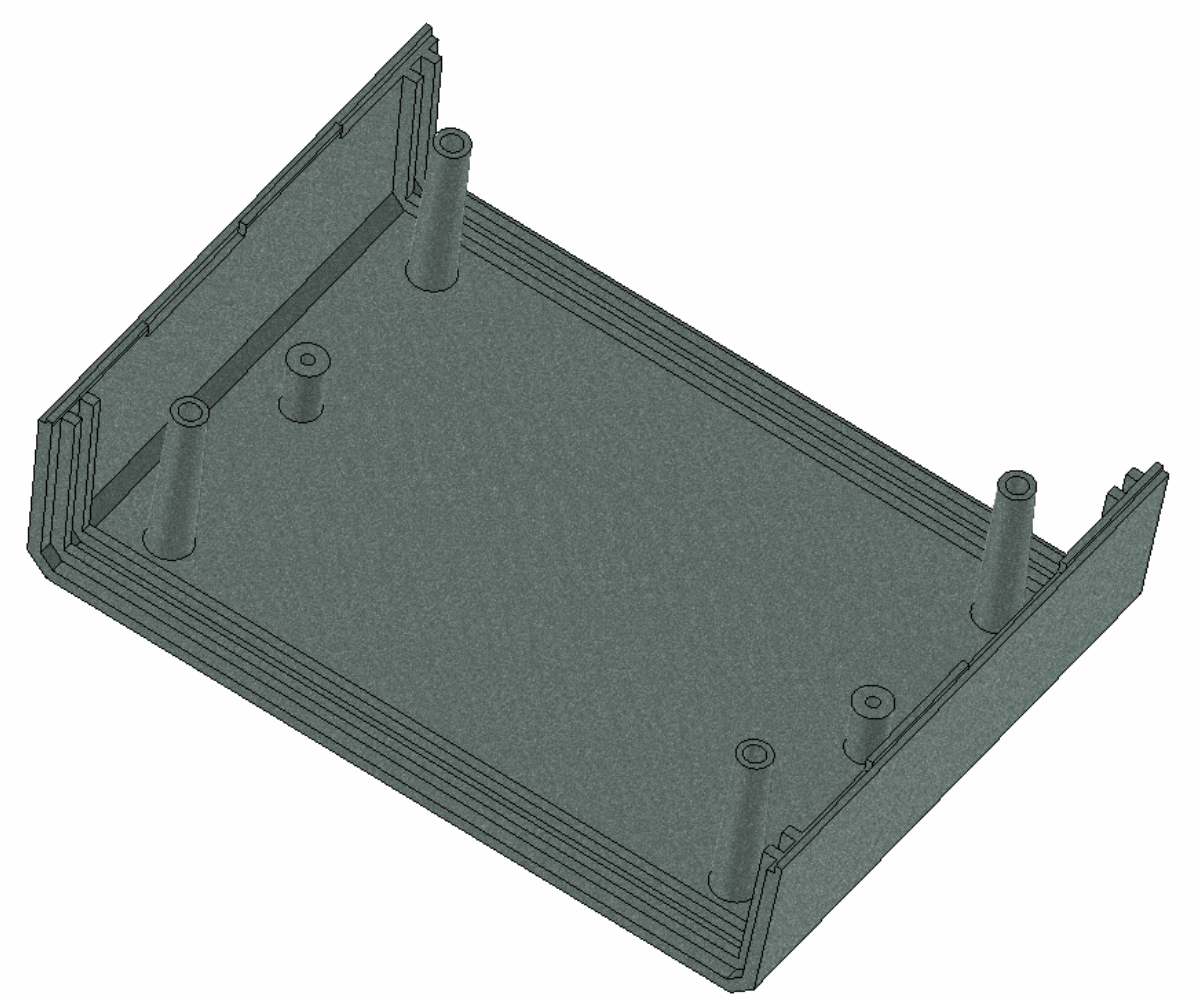

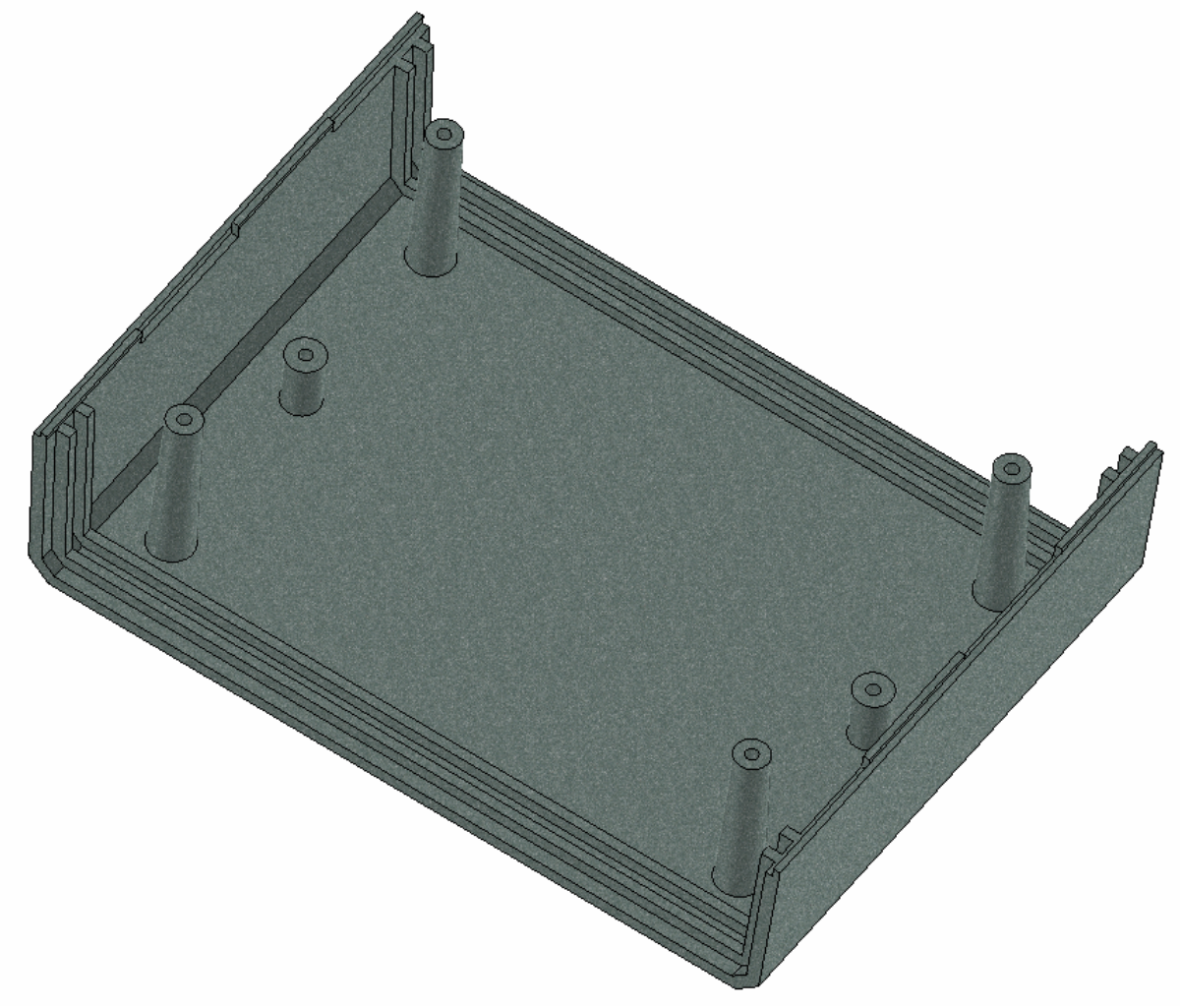

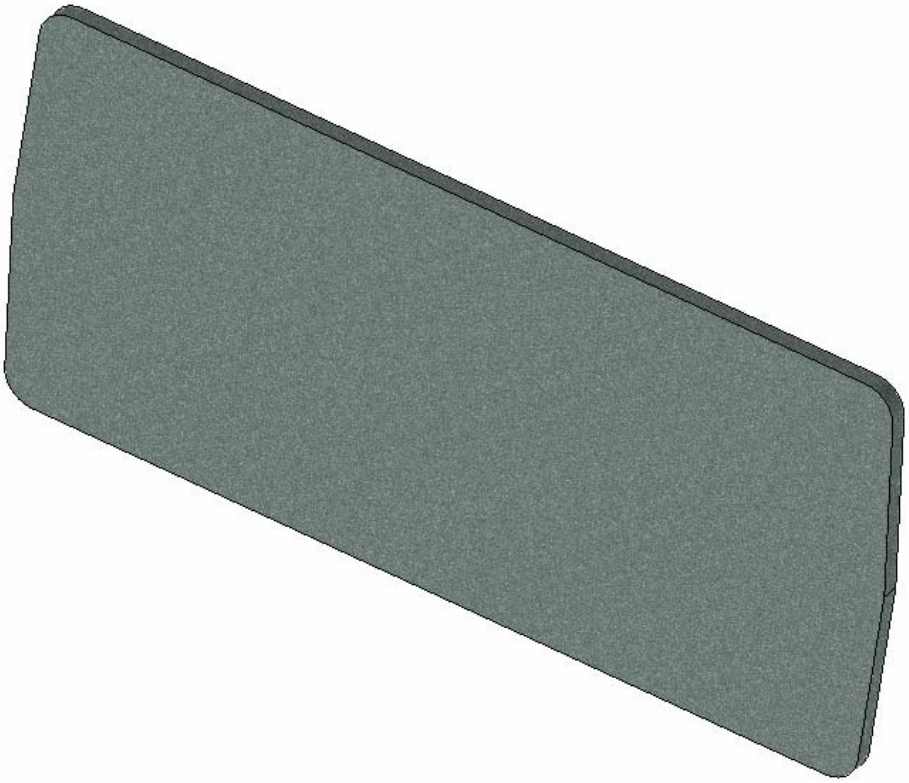

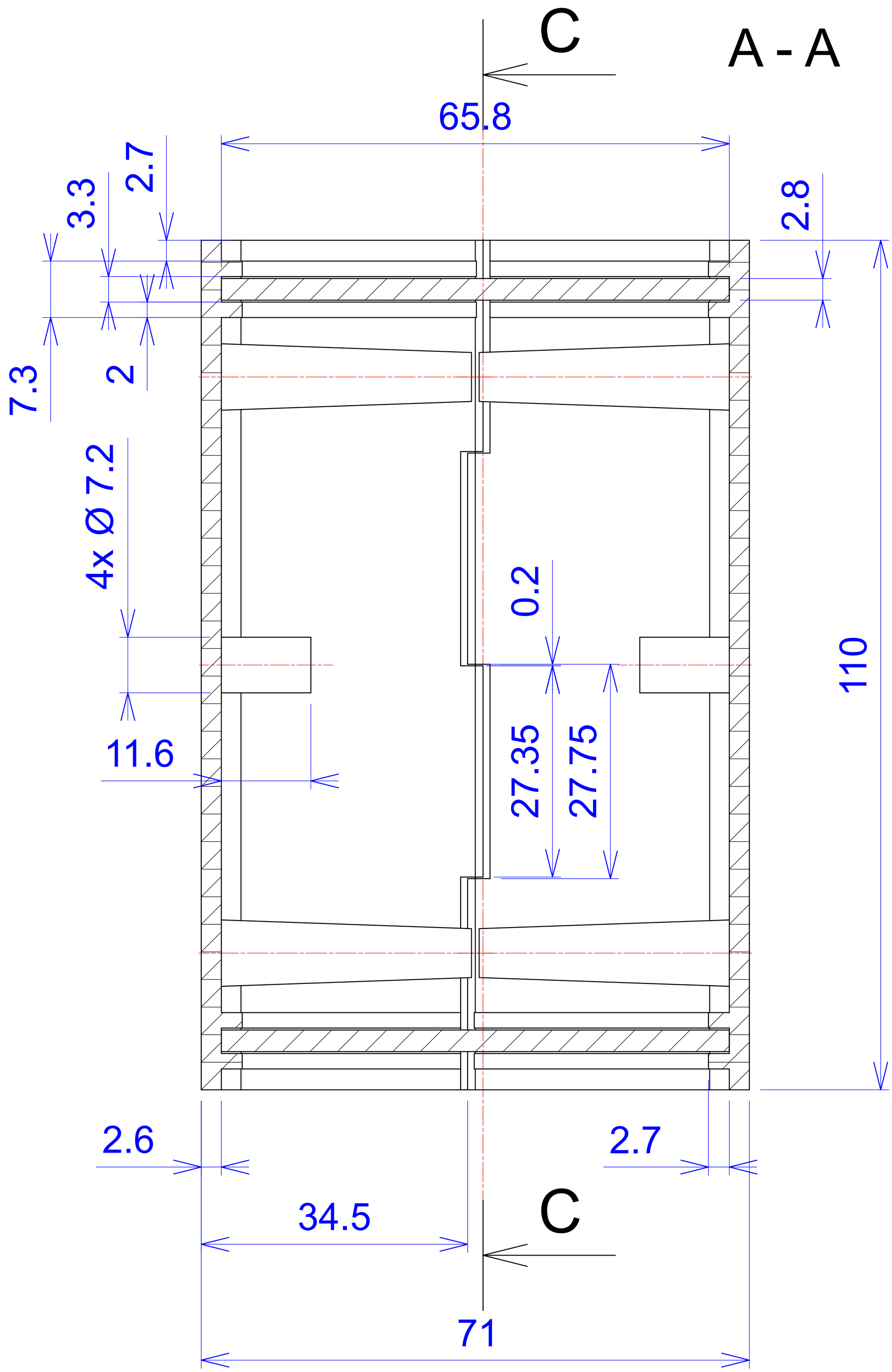
A - A
C
65.8
2.7
3.3
2.8
7.3
2
4x Ø 7.2
0.2
110
11.6
27.35
27.75
2.6
2.7
34.5
C
71

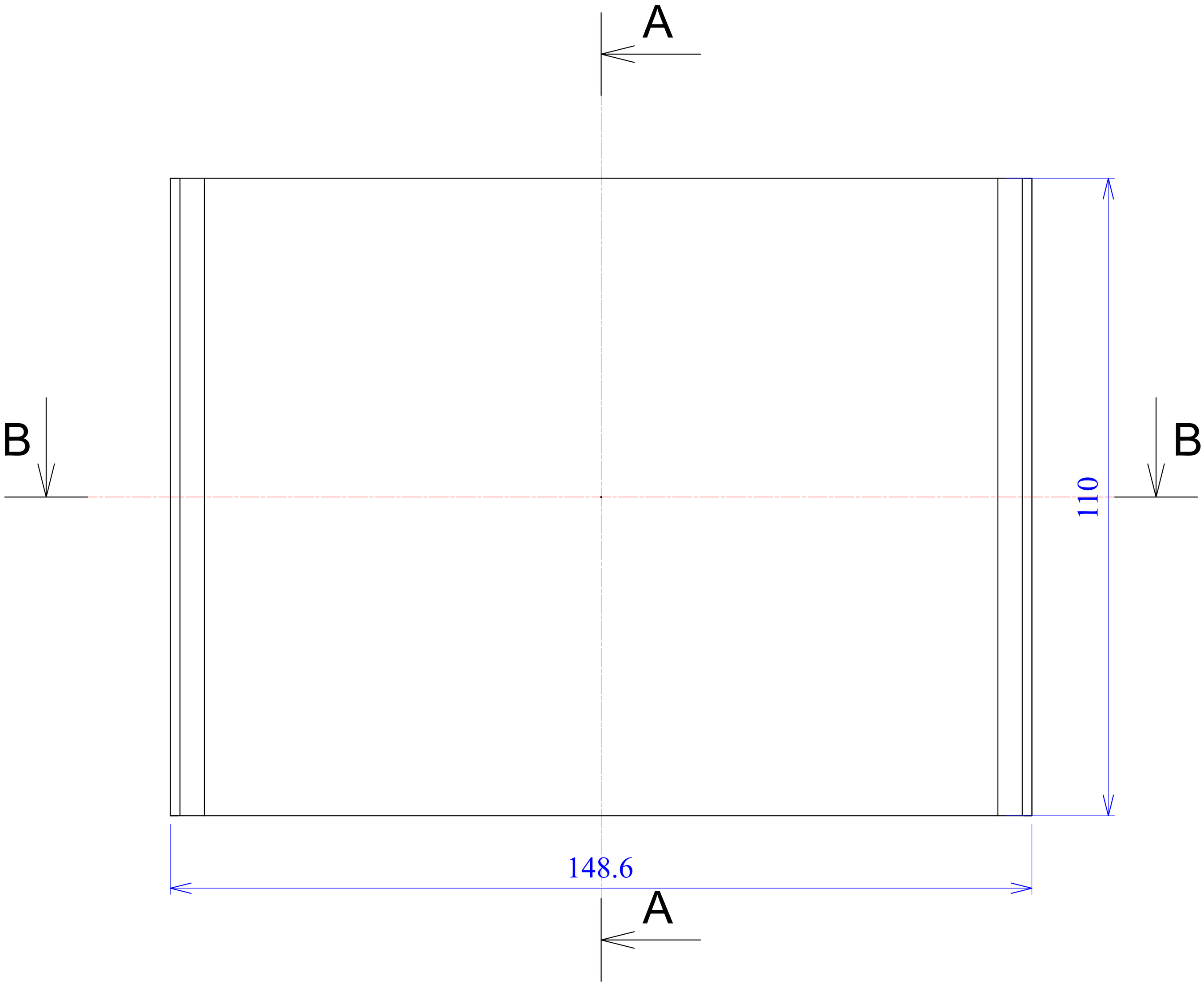
A
B
B
110
148.6
A

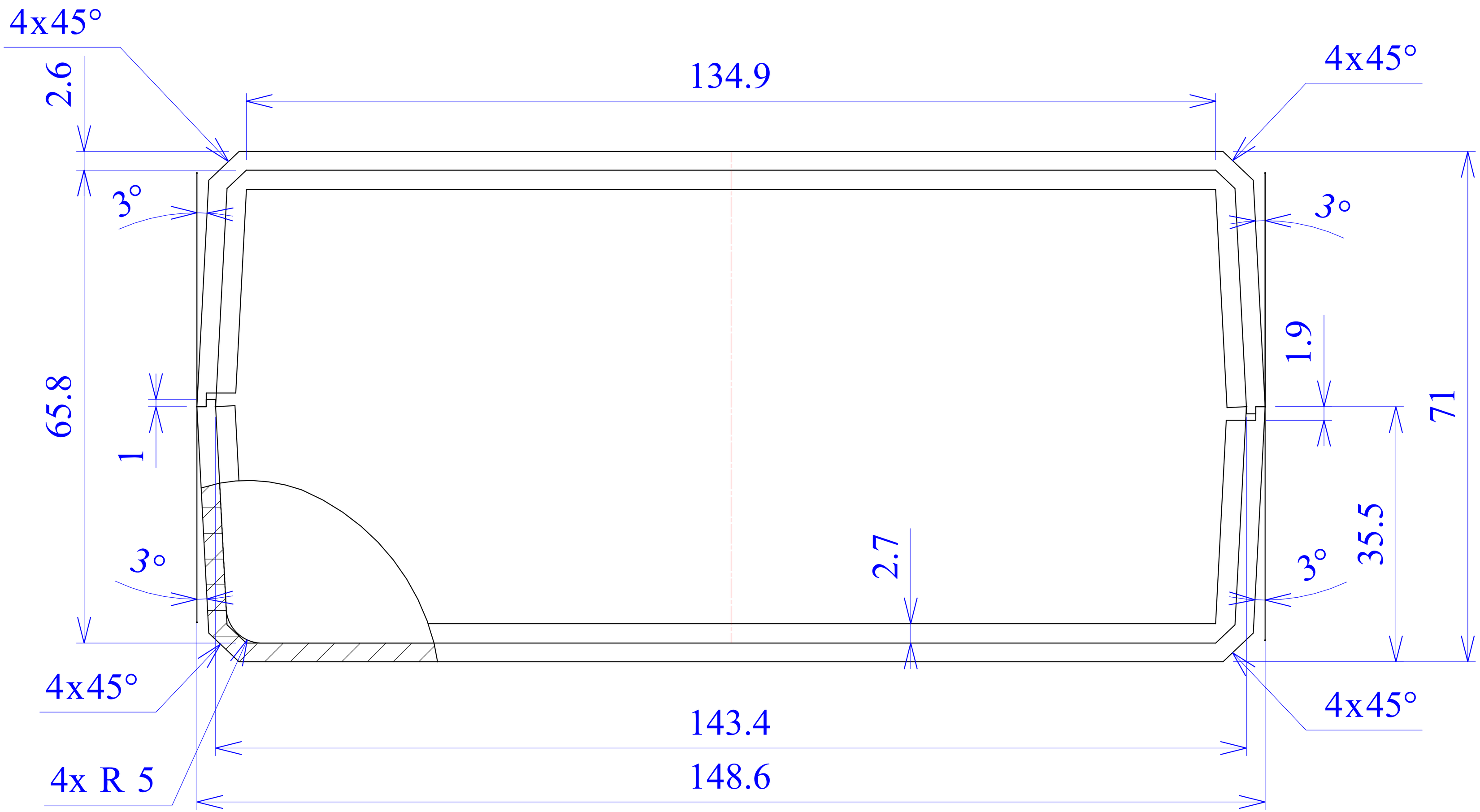
4x45°
2.6
134.9
4x45°
3°
3°
65.8
1
1.9
71
35.5
3°
3°
2.7
4x45°
4x45°
143.4
4x R 5
148.6

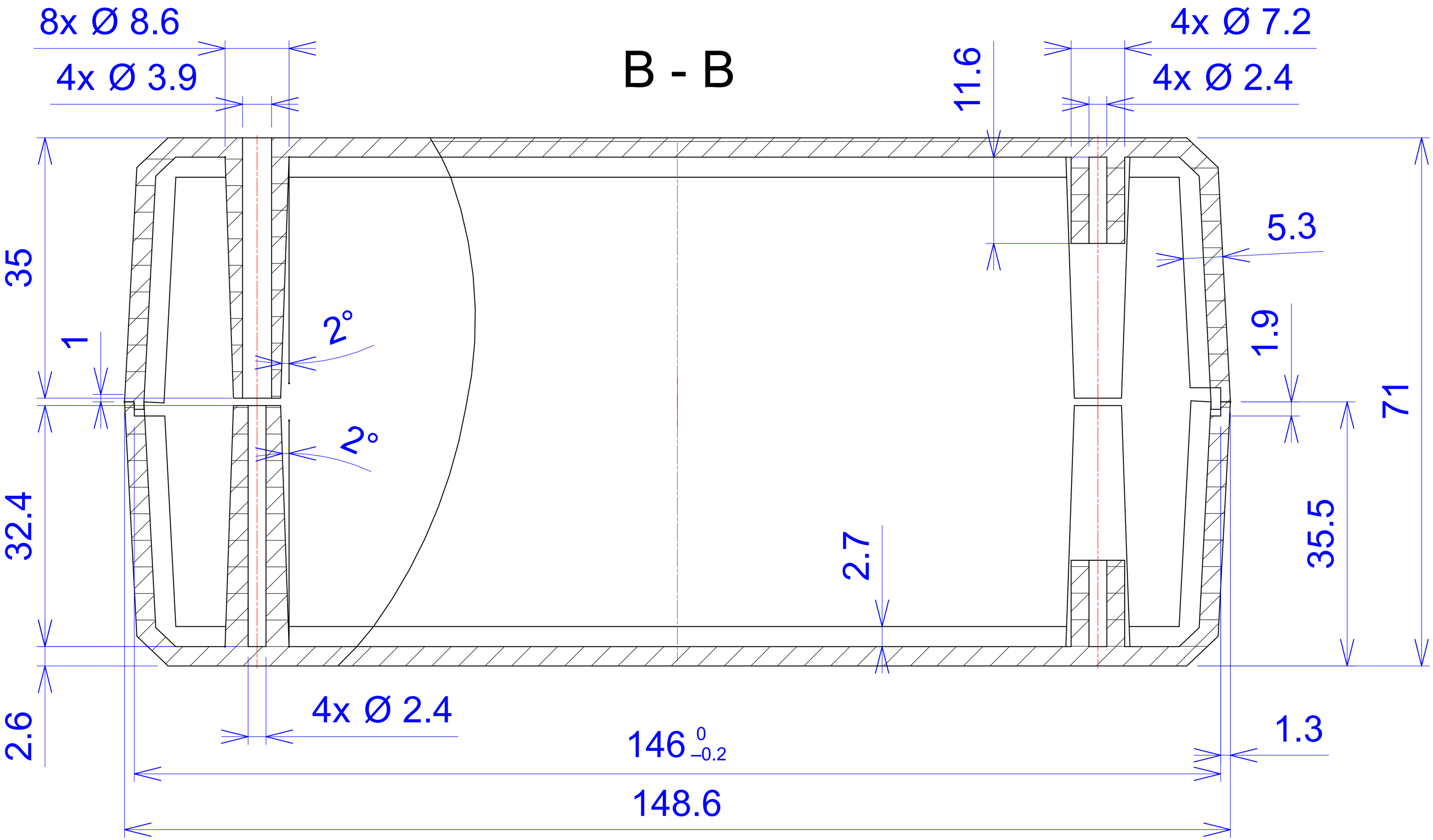
B - B
8x Ø 8.6
4x Ø 3.9
4x Ø 7.2
4x Ø 2.4
11.6
5.3
1.9
71
35.5
35
1
2°
2°
32.4
2.7
2.6
4x Ø 2.4
146 0 −0.2
1.3
148.6

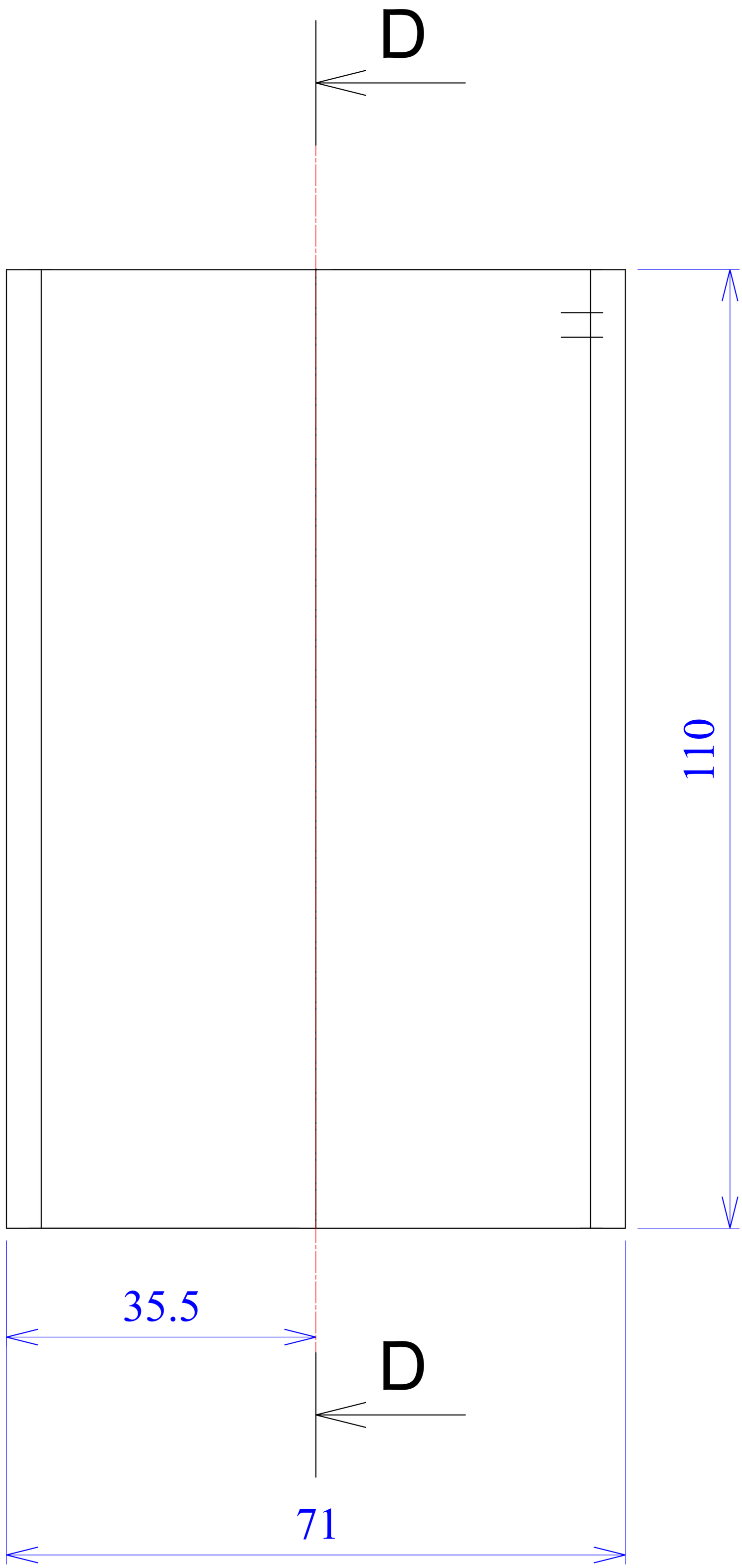
D
110
35.5
D
71

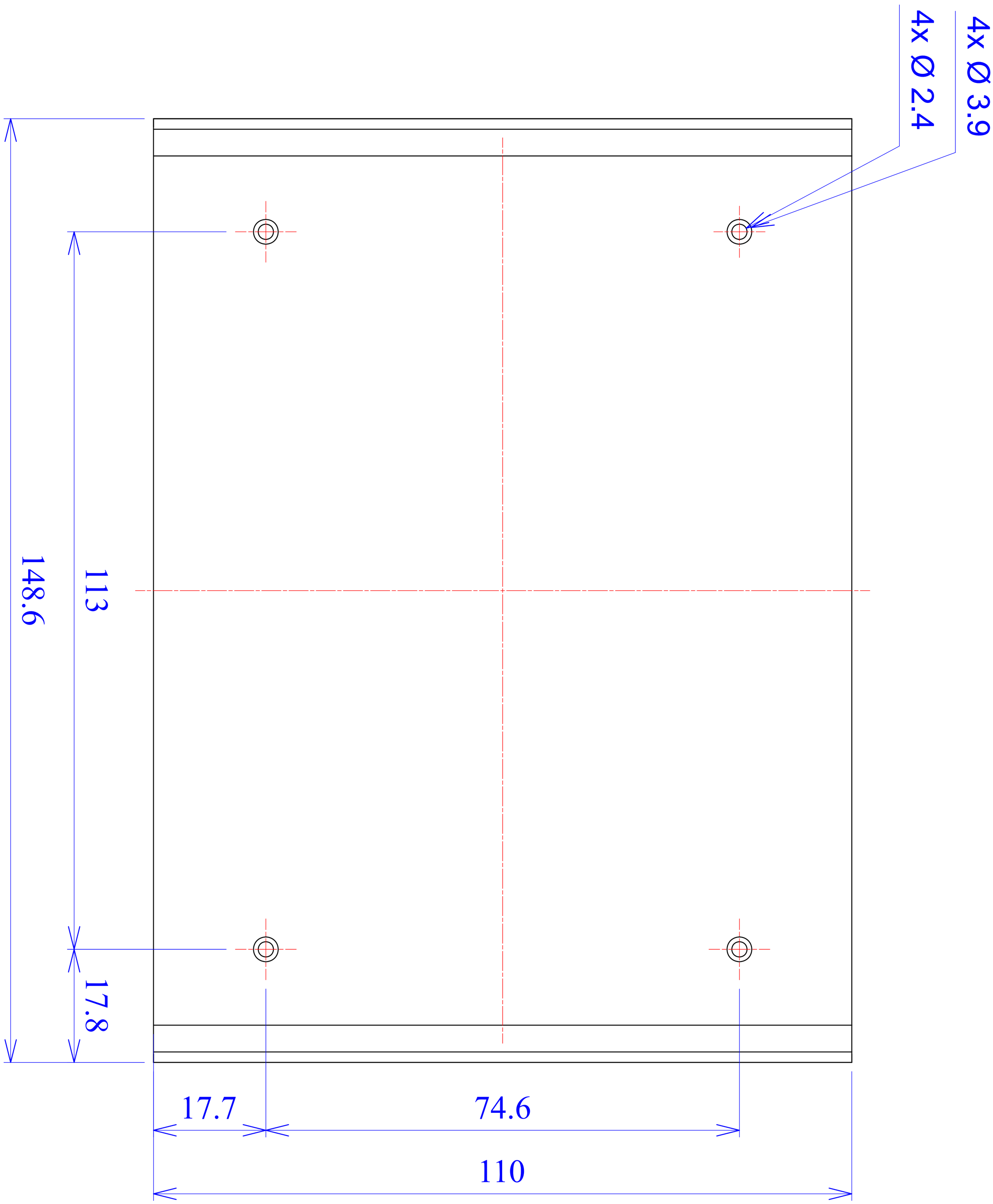
4x Ø 3.9
4x Ø 2.4
148.6
113
17.8
17.7
74.6
110

C - C

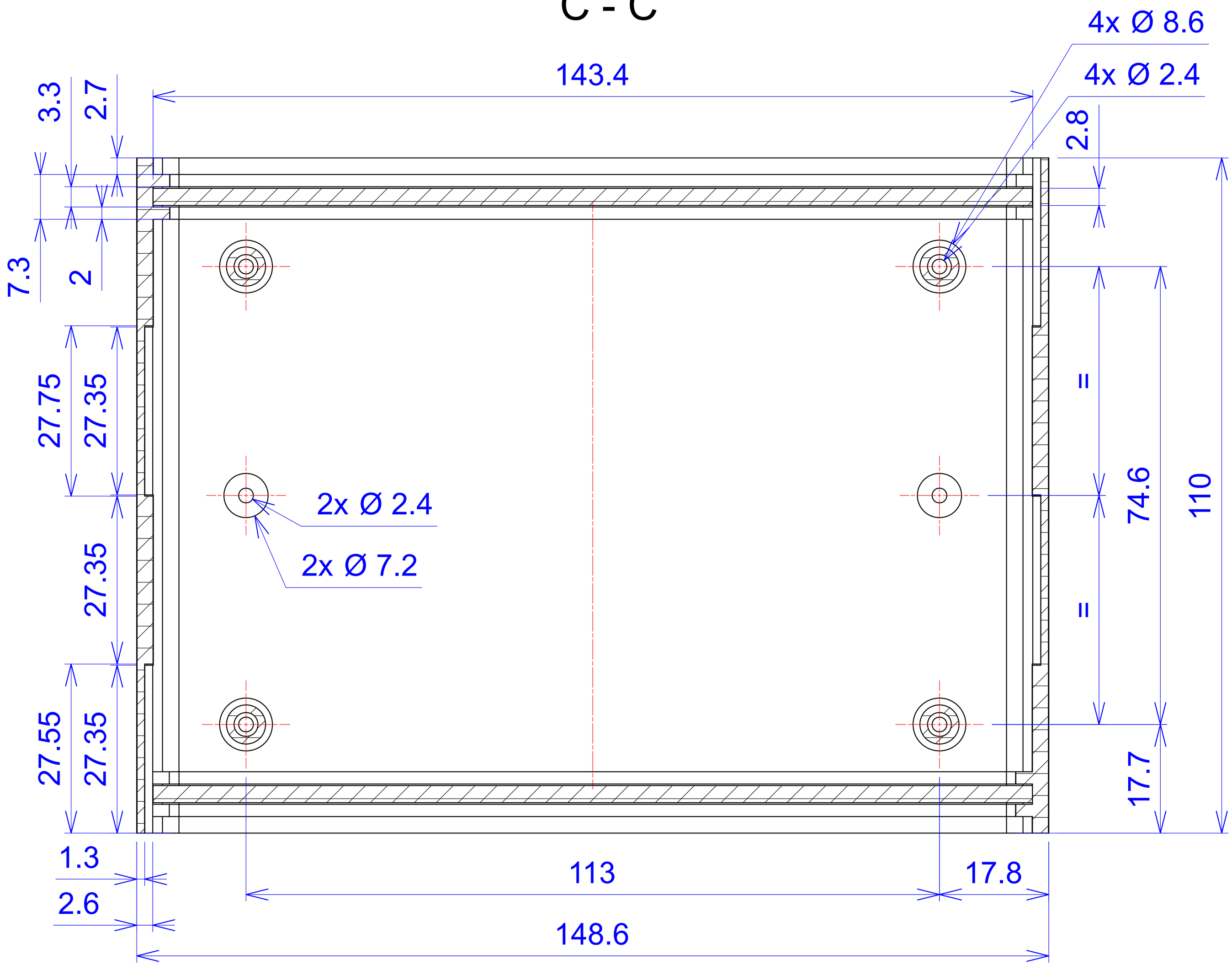
4x Ø 8.6
4x Ø 2.4
143.4
3.3
2.7
2.8
7.3
2
27.75
27.35
=
74.6
110
2x Ø 2.4
2x Ø 7.2
27.35
=
27.55
27.35
17.7
1.3
2.6
113
17.8
148.6

D - D

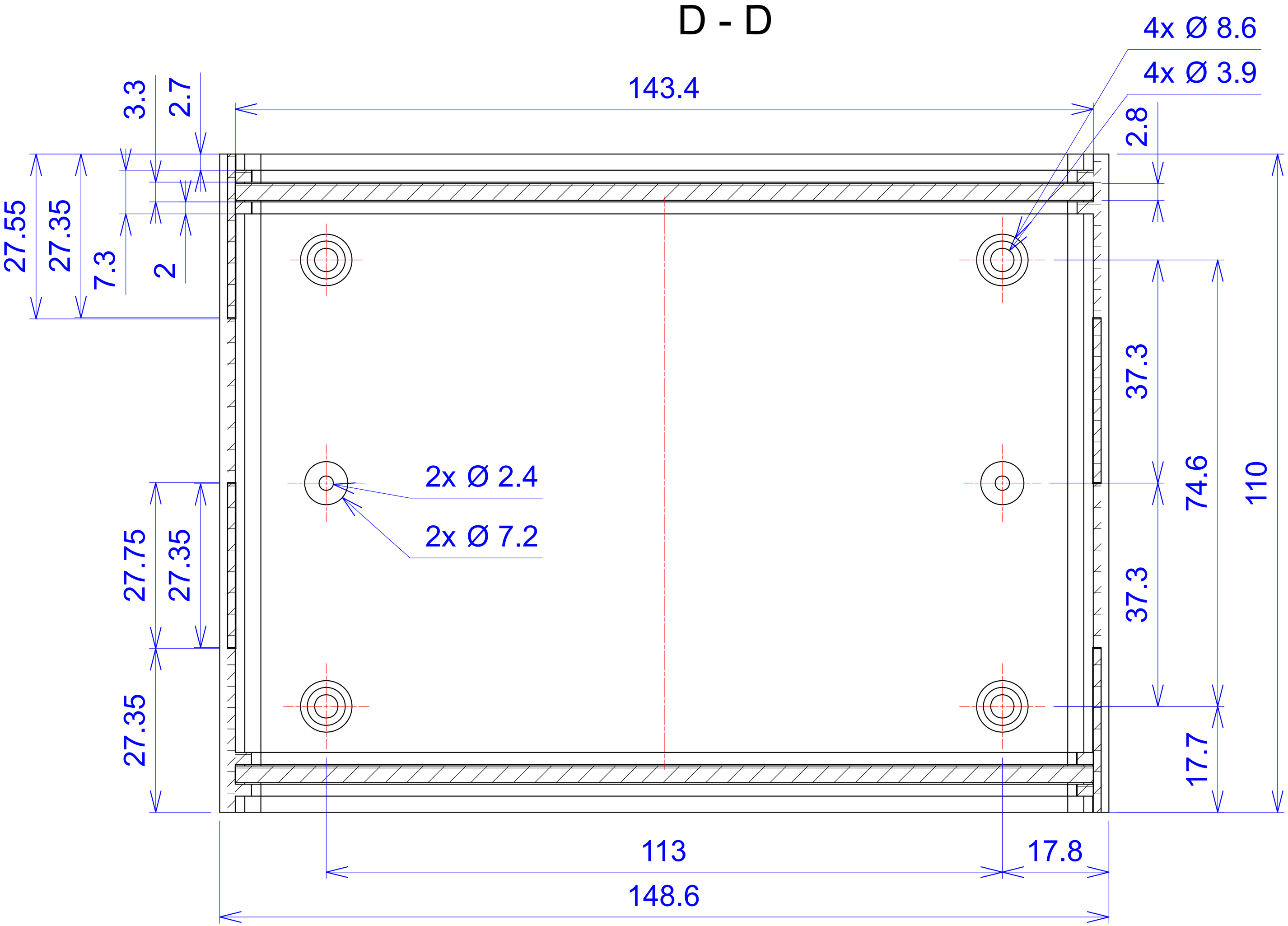
4x Ø 8.6
4x Ø 3.9
143.4
3.3
2.7
2.8
27.55
27.35
7.3
2
37.3
74.6
110
2x Ø 2.4
2x Ø 7.2
27.75
27.35
37.3
27.35
17.7
113
17.8
148.6